

厦门倍联矿山机械有限公司
XIAMEN BESTLINK FACTORY CO.,LTD.

地址：厦门市湖里区长乐路350号闽南古镇A部8001单元
Add:Unit 8001 ,Part A,Minnan culture town,No.350 Changle road,Huli,Xiamen,China. Post Code:361006
Tel:+86 592 5601702 / 5682036 Mobile:+86 13600966313
Fax:+86 592 5601703 / 5602971 www.split-stone.com
E-mail:info@quarryingtools.com www.quarryingtools.com

BESTLINK
倍联机械

Ideal, efficient and professional machine

for natural face stone processing

理想，高效而专业的石材自然面加工机器

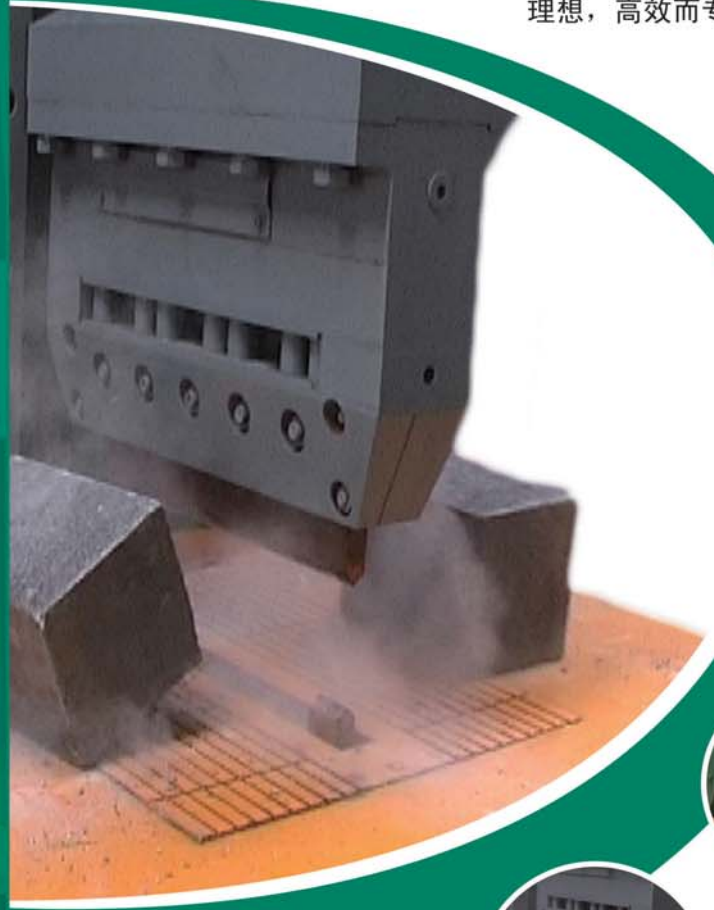







厦门倍联矿山机械有限公司是一家致力于开发设计、制造生产各种高品质液压设备的专业公司。我们专业设计制造的石材加工机械和开采设备，已广泛应用于石材行业各个领域。

我们研发制造的BRT系列液压斩石机是在国内处于领先地位，专门用来加工生产各种规格的方石块、铺路石，砌墙石，路沿石等石材产品的机械。倍联斩石机采用德国液压技术，以及法国施耐德电气元件，充分保证产品的质量和安全，通过严格的质量控制，斩石机系列产品已获CE安全认证。

为了品质上赶超同类进口液压设备，为了振兴民族的液压机械制造业，我们的团队正被打造成一支饱含热情、作风严谨、技术过硬的强悍队伍。

我们的发展理念：企业靠人才发展、人才靠企业成长。

我们的服务宗旨：不懈追求客户完全满意。

我们的企业目标：持续打造倍联知名品牌。



Xiamen Bestlink Factory Co., Ltd specializes in designing and producing Stone splitting machines. Using our splitting machines you could produce a wide range of products like: Cobble stones, Paving stones, Tiles for paving and cladding, Wall stones and Kerb stones, etc. Our machines are known also as splitters, hydraulic splitting machines, stone splitter or stone cutter (for rustic products).

The hydraulic system of our machines mainly uses the hydraulic components of German Bosch Rexroth with stable performance, no oil leakage, low noise and long service life and so on.

Electrical system of our machines is safe, reliable, convenient and flexible and the components are from the brands of Schneider and Omron.

The machines can be operated automatically or manually and move continuously or single-step. Equipped with a separate control cabinet, the electric control part can be operated by a total station and a button box. The start-up and operation is very convenient.The character of the machine is of intelligent gear cutting head, can adjust itself according to the condition of the stone face, and then, generate hydraulic power to split the stone down in a spot. Therefore it is of high speed, good quality, low consumption and so on, which can improve products quality and production efficiency in a high degree.

Xiamen Bestlink Factory Co.,Ltd является профессиональным производителем различных горнодобывающих инструментов и оборудований. Наше производствоКамнекольный станок BRT серии является универсальными машинами, он может разбить камень многих видов различных спецификаций, производит брусчатки,бордюры и стеновые камни и т.д.

Камнекольный гидравлический станок предназначен для изготовления малогабаритных брусков из натурального и искусственного камня. Пресса рабочей мощностью от 20 до 320 тонн и линии для изготовления брусчатки из камня. Стабильная работа , не утечки нефти,низкий уровень шума,длительный срок службы.







BRT320T 1200×800-M
BRT200T 1200×400-M
BRT160T 1000×400-M
Гидравлический камнекольный станок
BRT320T/200T/160T

Processing natural-face stone, kerb stone, building stone, border stone, paving stone, wall stone, semi-finished products of cube stone, etc

可加工自然面石头,路沿石,围墙石,方块石,地铺石,砌墙石,方块石半成品等。

适用于斩切大型石块。由于其巨大的切力和超宽的刀口，这3个型号的斩石机能轻易地将任何规格的岩石荒料劈成大块的，规格的建筑石，路沿石和条石。

It's specially designed for splitting big blocks. Due to their big splitting power and long blade, these 3 models can easily split any big rock blocks into big and regular building stone, kerb stone and wall stone.

Они подходит к расщепления больших камней, Из-за огромного разреза и широкое лезвие,эти три модели могут легко разбить крупные куски каменных блоков любой спецификации камень,нормальный камень,бордюры,и брусчатки из камня.

型号	劈裂力	最大劈石宽度	最大劈石高度	刀片浮动幅度	电机功率
Model No.	Splitting force (ton)	Max.splitting width (mm)	Max.splitting height (mm)	Adaptation of upper /lower blade(mm)	Power supply (kw)
BRT320T-1200*800-M	320	1200	800	36*20	22
BRT200T-1200*400-M	200	1200	400	30*15	15
BRT160T-1000*400-M	160	1000	400	30*15	15







BRT120T 1000x300-M
BRT70T 800x300-M
BRT40T 600x200-M

上述3个型号都是龙门式斩石机。其刀口宽度为600-1000mm,适合加工大规格，表面平整的板材。

Above three models are all bridge style machine. They are suitable for processing big and even face slabs because of their long blades.

型号	劈裂力	最大劈石宽度	最大劈石高度	刀片浮动幅度	电机功率
Model No.	Splitting force (ton)	Max.splitting width (mm)	Max.splitting height (mm)	Adaptation of upper /lower blade(mm)	Power supply (kw)
BRT120T-1000*300-M	120	1000	300	20*10	15
BRT70T-800*300-M	70	800	300	20*10	11
BRT40T-600*200-M	40	600	200	20*10	7.5











BRT 160T 500×550
Гидравлический камнекольный станок BRT160T

Processing natural-face stone, kerb stone, small building stone, border stone, paving stone, wall stone, semi-finished products of small cube stone,etc

可加工自然面石头,路沿石,围墙石,方块石,地铺石,砌墙石,小方块半成品等。

BRT160T 500×550k可加工最大尺寸为500×550mm的路沿石、围墙石、方块石、以及适合BRT20T与BRT40T斩石机加工用的半成品小方块石。该斩石机力量大，适用于斩切各种类型的岩石（花岗岩，大理石，石灰岩，砂岩等）。其上下刀体可自动伸缩1-2cm以适应表面不平整的石头。
可以与BRT20T及BRT40T组合成完整的高效生产线用于生产地铺石、墙石等或大或小的成品方块石。

BRT160T 500×550 are desinged for splitting stone blocks up to 500×550mm into smaller building stone, kerb stone, border stone and semi-finished paving stone and wall stone for BRT20T and BRT40T if placed in a production line. These machines are manufactured for hard stone splitting like granite, syenite or gabbro. The upside and downside blades can be adjusted automatically by 1-2cm to be fit for uneven stone splitting.
The greatest advantage of this model is that, due to its power and useful working dimension in reducing the material (usually quarry scrap), it is able to work with model BRT20T or BRT40T to obtain a high-quality half-finished product.

BRT160T 500 × 550 может быть собрана на производственной линии и быстро рассекать максимальные размера 500 × 550 мм камни. Диски в верх и в низ могут быть автоматически изменяются на 1-2см, так что машины могут быстро разделить неравномерным камнями. Эти машины выпускаются для твердых расщепления камня, как гранит, сиенит или габбро. Независимо от раскалывания из мягкого камня, такие как песчаник и известняк, или резать твердый камень, таких как гранит, может поддерживать длительный срок службы.

型号	劈裂力	最大劈石宽度	最大劈石高度	刀片浮动幅度	电机功率
Model No.	Splitting force (ton)	Max.splitting width (mm)	Max.splitting height (mm)	Adaptation of upper /lower blade(mm)	Power supply (kw)
BRT160T-500*550	160	500	550	30*15	15















BRT100T 400x400
BRT70T 400×350
Гидравлический камнекольный станок
BRT100T / 70T

Processing natural-face stone, kerb stone, small building stone, border stone, paving stone, wall stone, semi-finished products of small cube stone,etc

可加工最大尺寸400x350-400mm的自然面石头,路沿石,围墙石,方块石,地铺石,砌墙石,小方块半成品等。

BRT100T/BRT70T are desinged for splitting stone blocks up to 400×350mm into smaller building stone, kerb stone, border stone and semi-finished paving stone and wall stone for BRT20T and BRT40T if placed in a production line. These machines are manufactured for hard stone splitting like granite, syenite or gabbro. The upside and downside blades can be adjusted automatically by 1-2cm to be fit for uneven stone splitting.

BRT100T/BRT70T может быть собрана на производственной линии и быстро рассекать максимальные размера 400x350-400 мм камни. Диски в верх и в низ могут быть автоматически изменяются на 1-2см, так что машины могут быстро разделить неравномерным камнями. Эти машины выпускаются для твердых расщепления камня, как гранит, сиенит или габбро. Независимо от раскалывания из мягкого камня, такие как песчаник и известняк, или резать твердый камень, таких как гранит, может поддерживать длительный срок службы.

型号	劈裂力	最大劈石宽度	最大劈石高度	刀片浮动幅度	电机功率
Model No.	Splitting force (ton)	Max.splitting width (mm)	Max.splitting height (mm)	Adaptation of upper /lower blade(mm)	Power supply (kw)
BRT100T-400*400	100	400	400	20*10	15
BRT70T-400*350	70	400	350	20*10	11



BRT40T 240×320
BRT20T 160×180
Гидравлический камнекольный станок
BRT40T /20T

方块石,小地铺石,小砌墙石,马赛克等石材制品。

BRT40T和BRT20T斩石机是一种快速将花岗岩、大理石、砂岩、玄武岩、板岩等各种岩石快速劈断的液压设备。适合于加工规格较小的自然面小方块石、地铺石、墙石及更小规格的自然面马赛克。
因其上下的刀体，都可以根据石头的形状，自动伸缩1-2cm，所以既是形状有点不规则，BRT斩石机都可快速将其劈断。

Processing natural-face stone, cobble stones, small paving stones, small wall stones, mosaic, etc.

BRT40T/BRT20T are used to split all types of stone, such as granite, marble, sandstone, basalt and slate. They are designed for the production of cobble stone, small paving stone, small wall stone and mosaic. The machines are constructed in open style and characterized by high reliability, high efficiency, high product output and easy handling.
The blades upside and downside can be automatically adjusted by 1-2cm according to the shape of stone, so the machines can quickly split the uneven stones.

BRT40T/BRT20T используется для разделения всех типов камней, таких как гранит, мрамор, песчаник, базальт и шифер.они очень подходит для не больших природных обработки,спицификации небольшой квадратный камень,брусчатка, стенный камнь,и природных мозайка,открытое устройство,имеет преимущество с стабильными устройством,высокой эффективностью. большой выход и простая манипуляция. Диски в верх и в низ могут быть автоматически изменяются на 1-2см, так что машины могут быстро разделить неравномерным камнями.Машины используются международные пакупатели .они одобрительны. И мы могли бы сделать специальные конструкции в соответствии с вашими требованиями

型号	劈裂力	最大劈石宽度	最大劈石高度	刀片浮动幅度	电机功率
Model No.	Splitting force (ton)	Max.splitting width (mm)	Max.splitting height (mm)	Adaptation of upper /lower blade(mm)	Power supply (kw)
BRT40T-240*320	40	240	320	15*10	7.5
BRT20T-160*180	20	160	180	10*5	7.5



BRT70T-MF



BRT320TM-P



BRT70TM-L

四刀斩石机

Four sides splitting production line(“MF” series）

用于将机切面（或平整面）的各种石材及混凝土块斩断劈开（对开）的斩石机，由于该型生产线具体上下和左右两侧四个方向的刀片同时作用，这样就保证了劈开面的规整。

The "MF" series splitting machinery are widely used in automatic splitting lines for both concrete and saw cut face stone, it's equipped with four blades to ensure a perfect split every time on all four sides of the products.

型号 Model	BRT20T-MF 600*300	BRT50T-MF 400*200	BRT70T-MF 600*300	BRT100T-MF 600*300	BRT120T-MF 1000*300
油缸压力 Splitting force (tons)	20	50	70	100	120
最大劈石宽度 Max.splitting width (mm)	600	400	600	600	1000
最大劈石高度 Max.splitting height (mm)	300	200	300	300	300
电机功率 Electric power (kw)	7.5	11	11	11	15
电流 Electric current (A)	15	22	22	22	30
液压流量 Oil flux (L/min.)	61	160	185	192	210
油箱大小 Oil tank cubage (L)	320	450	550	550	780
整机尺寸 Overall size(L*W*H) (mm)	1750*3200*1960	2570*1140*2490	2770*1140*2490	2770*1140*2490	3300*1200*2850
重量 Weight (kg)	1200	2500	3200	3800	4200

倾斜式斩石机和超宽斩石机

Tilting hydraulic splitting machine and wide slabs splitting machine

型号 Model	BRT70TM-L	BRT320TM-P
油缸压力 Splitting force (tons)	70	160*2
最大劈石宽度 Max.splitting width (mm)	400	2500
最大劈石高度 Max.splitting height (mm)	350	400
电机功率 Electric power (kw)	7.5	22
电流 Electric current (A)	22	42.5
液压流量 Oil flux (L/min.)	185	300
油箱大小 Oil tank cubage (L)	550	850
整机尺寸 Overall size(L*W*H) (mm)	1570*1140*2490	4000*1800*3600
重量 Weight (kg)	3000	16000
应用 Application	with 90° rotary splitting head,for splitting regular stone brick into two pieces or thick slabs splitting continuously,easy feeding	with USA design,for splitting wide slabs (less then 20cm in thickness) into Kerbstone, wall stone.

Note:Standard electric supply----3phase,380V/50Hz,customized motor will be available.

传送带
Conveyor Systems

传送带能在斩石机需要的供应和输出阶段传输所有的石料。对于斩石机连续流水线生产的客户来说，它是一个必备的工具。
我们的传送带有电动和手动的，可以配备滚筒，橡胶带，或特别的钢制履带，驱动方式可以是单向，双向往复运动。
我们可以根据客户需要设计更合适的传动带，和增加固定档板减少石料掉落。

Our conveyor belt enables all materials to be transported throughout the machine feeding and unloading stages. A must-have tool for those working on a continuous production cycle.
Our conveyor system is a fixed or pivoting conveyor that can be equipped with: rubber, tracked or special steel caterpillar belts, single or double motor drive with reciprocating motion.
Each conveyor can be fitted with fixed walls to contain the raw material.

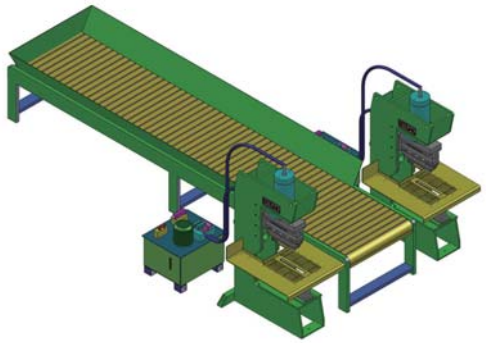

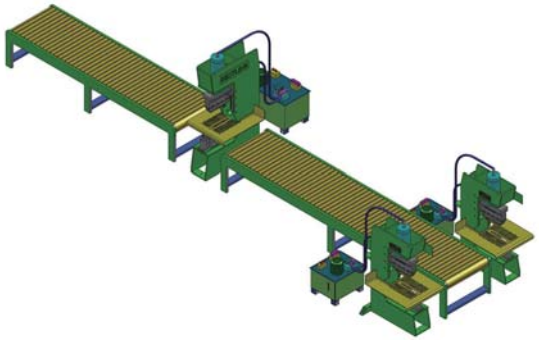

Technical specifications:

Model		PCV1	PCV2	PCV3	PCV4	PCV5	PCV6	PCV7	PCV8	COV7	COV8
Belt length	mm	2000	2000	3000	2000	3000	1500	1500	3500	2000	3000
Belt width	mm	800	1000	1000	800	1000	600	800	1500	600	800
Motor drive	pc	1	1	1	2	2	/	/	2	/	/
Lifting cyinder(a)	pc	/	/	/	/	/	/	/	1	/	/
Pivoting cylinder(c)	pc	1	1	1	1	1	1	1	1	/	/
Power supply	kw	2	1	2	1+1	2+2	/	/	2+2	/	/
Height	mm	950	950	950	950	950	950	950	1100	950	950
Total width	mm	1300	1300	1500	1200	1500	700	1150	2100	1000	1000
Conveyor weight	kg	2000	2000	2500	1500	3500	350	500	4500	400	500

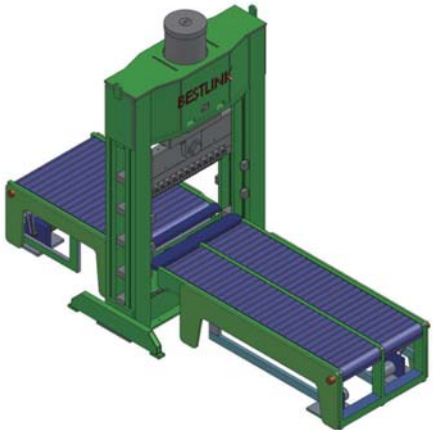

液压斩石机生产线
Hydraulic stone splitting machine production line
Гидравлический камнекольный станок—производственная линия

根据客户针对场地情况，生产石制品的规格，产量等要求，用我们的各种型号斩石机，为客户设计和组合成合适快捷的流水生产线，用于加工从荒料到路沿石、围墙石、地铺石及小方块石和马赛克的各种规格和用途的石头。
斩石机流水生产线可以发挥出最大的生产能力，提高产量和效益。

The line for stone splitting, from blocks to the correct size for mosaics, is designed for granite. This means that the line is suitable for all easily split types of rocks, and meanwhile maximize your productivity and benefits. By request we can prepare the project according to clients' conditions.

Лилия для расщепления камень,от блока до нужного размера для мозаики,гранита. Это означает,что линия подходит для всех легко расщепляются типов пород, а между тем в повышении производительности и преимущества. По запросу мы можем подготовить прект в соответствии с условиями заказчика.

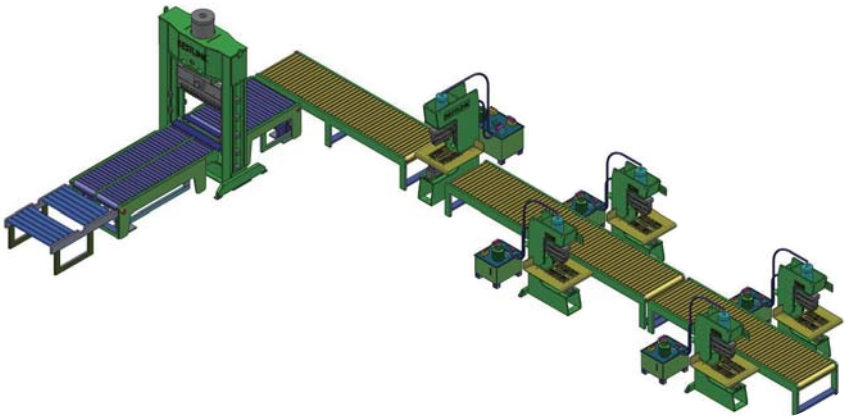

千斤顶斩石机
Masonry Block Splitter Stone & Slab Splitter

这种千斤顶式的斩石机非常适合于建筑施工现场，用来斩断烧结砖块，混凝土砖，天然石块，石板。该斩石机结构简单，操作便捷。

Our Stone & Masonry Manual tools are self-contained and feature a unique operation that provides the highest productivity for splitting natural stones and brick and masonry products in the industry.For bigger jobs we recommend our air-assisted tools.air-assisted tools adjust the position of the worktable and cutting blades even faster – the operator simply squeezes the air trigger - the adjustment and the cut follow. Our air-assisted tools require only a small outside compressor; a portable one is perfectly adequate. Furthermore, compressors are usually available on job sites.

型号 Model	JS20	JS40	JS50	EJS40
劈 裂 力 Splitting power (T)	20	40	50	40
劈石宽度 Splitting width (mm)	400	500	600	450
劈石高度 Splitting height (mm)	210	240	260	150
包装尺寸 Package Dimension (cm)	55*70*90	60*80*120	60*95*120	60*100*120
净重 Net Weight (kg)	105	175	205	265
毛重 Gross Weight (kg)	130	200	230	290
驱动方式 Powered by	manual or compressed air (5-7bar,1cbm/min.)			electric power,1.5kw





JS20　　JS40 / JS50　　EJS40

液压石材冲板机CP-90

Hydraulic stone stamping machine CP-90

Пресс гидравлический для производства фигурной плитки CP-90

液压冲板机是一种快速将石板材冲压成各种形状石砖块的机器，可装配40多种形的刀具，生产出形状丰富多样的产品，特别是用本机加工石材产业中的板材边角余料和废料，将其变废为宝。该设备结构紧密牢固，操作简单，易于维护，每天产量大约为100-120平方米。此冲板机压力为20吨，可冲压板材的最大尺寸为30cm×30cm×3cm；如果有需要，我们可以把冲压力增加到40吨，即可冲压最大为30cm×30cm×5cm的板材。我们的冲板机有两款机型,CP-90(A)和CP-90(B)。CP90(A)有冲压、斩石两种功能，CP-90(B)还可以连续加工自然面小石条。

The hydraulic stamping machine is specially designed for changing the leftovers of slabs or tiles into amazing paving stones. It could stamp more than 40 different shapes by different dies with hydraulic system inside. And we could make special designs according to your requirements. This machine has very compact structure. It is easily operated and maintained. It has the output around 100-120m² per day. The standard splitting power is 20 tons, maximum processing stone size is 30cm×30cm×3cm(L*W*H). We can adjust the hydraulic system with 40 tons splitting force, then it can process the slabs up to 5 cm in thickness. There are 2 types: CP-90 (A) and CP-90 (B). CP-90 (A) has two functions---- stamping and cutting, while CP-90 (B) has one more special device to split the slabs into natural face strip in rapid succession.

пресса CP-90 специально для изменения остатков плит в плитняк,У нас есть около 40 различных моделях. И мы могли бы сделать специальные конструкции в соответствии с вашими требованиями. Эта машина имеет очень компактную структуру. Надежность и простота в эксплуатации и обслуживании. выход вокруг 100 m²~120 m² в день.Машина мощностью 20 тонн, А максимальный размер обработки камня является 30cm×30cm×3cm(L*W*H).мощность может быть увеличена на 40 тонн в соответствии с требованиями клиентов, то максимальный размер обработки может быть 30cm×30cm×5cm(L*W*H). Мы можем предложить 2 вида этой машины, CP-90(A) и CP-90(B). имеет две функции, штамповка и резка, а CP-90(A) имеет три функции, штамповка, резка и расщепления.

型号 Model	CP90-20T	CP90-40T	CP90SA	CP90FA
压力 Hydraulic pressure (Mpa)	20	20	20	20
冲击力 Splitting power (T)	20	40	40	40
电机功率 Electric motor power (kw)	3.7	5.5	5.5	9.0
最大加工尺寸 Max.slab stamping size (cm)	30*30*3	30*30*5	30*30*5	30*30*5
最大冲切宽度 Max splitting length (cm)	30	35	Semi-automatic	Fully-automatic
最大板材厚度 Slab thickness (cm)	1-3	1-5	1-5	1-5
主机尺寸 Machine size (cm)	80*100*150	80*100*150	80*100*150	230*95*185
重量 Weight (kg)	500	580	650	1500
用途 Fuctions	stamping,cutting, splitting	stamping,cutting, splitting	stamping	stamping,air consumption 1m³/min.



CP90-20T
CP90-40T



CP90SA



CP90FA

模 具 尺 寸 图 A
MEASURE PATTERN MEASURE

六边形 Hexagon 4种尺寸
M 01 12cm
M 02 14cm
M 03 17cm
M 04 20cm

腰鼓形 Waist Drum Shape M11
扇形 Fan Shape M12
圆月围星 Circle Moon Round Star M 19
M 19A M (18A)
M 19B

龟壳形 Turtleback Shape M 03 M07
红旗形（波浪形） Red Flag Shape (Wave Shape) M13
马赛克 Mosaics 尺寸可根据需要定做 Sizes are available upon customers' requests M 20

花瓶形 Vase Shape M 14
菊花形 Chrysanthemum Shape M 21
M 21A
M 21B (M 01)

正方形 Square M 05
码头砖形 Dock Brick Shape M 15

菱形 Rhombus M 06
苹果形 Apple shape M 16
灯形 Lamp Shape M22

铜钱形 Copper Case Shape M 05 M 06
自然面（小长条） Natural Face (Small Long Bar) M23

梅花形 Plum Blossom Shape M 17
链条形 Chain Shape M24

平行四边形（立体形） Parallelogram (Solid Shape) M 07
M 17A M17B
M 24B(M18B) M24A

古井形 Ancient Well Shape M 18

工字形 Ishape M 08
长方形 Rectangle M 09
八角形 Octagon M25

多边形 Polygon M 10
M 18A (M19A)
M18B(M24B)
M25A M25B

模 具 尺 寸 图 B
MEASURE PATTERN MEASURE

扇形 Fan Shape M26-2.3
扇形 Fan Shape M28-4.7
扇形 Fan shape M29-5.9
扇形 Fan Shape M27-3.5

乱形 M 30
Irregular Shapes
5-1 5-2 5-3 5-4

大圆形 Big Round M31

M32 火盆压顶石 Fire-pit

M33 弯刀形 Curve Shape

蘑菇石面劈石机
Decorative Stone Breaking Machine

用于加工饰面石材的蘑菇面效果。

It help to lop the cut-to-size slate,sandstone,marble and granite into rustic finish.

型号 Model	ES-16	ES-40	ES-40D
电机功率 Motor power(kw)	1.5	4	4.5
敲击频率 Stroke(shot/min.)40mm	140	140	140
刀头 blade number	1	1	2
最大加工高度 Max.stone height (mm)	300	400	max. width 50-600
最小加工高度 Min.stone height (mm)	50	50	max.thickness 50-300
最大加工厚度 Max.stone thickness(mm)	80	80	lopping force 40tons
最小加工厚度 Min.stone thickness(mm)	15	15	/
外形尺寸 Overall Size (mm)	800*800*2200	1100*950*2500	1800*2800*1800
净重 Net Weight (kg)	850	1000	1200
应用 Aplication	For lopping the slate,sandstone or marble slabs into rustic finish,single working blade. 把板岩、砂岩、大理石加工成蘑菇石面		For lopping the slabs into rustic finish with two-side operating units in one pass. fit for soft to hard stone,automatic lopping.











ES-16 / ES-40



ES-40D

自动落料切石机
Gravity feeding stone brick splitting machine



型号 Model	CUBE20C
劈裂力 Splitting force (tons)	20
电机功率 Motor power(kw)	5
最大石头尺寸 Max.stone size (mm)	L*150*150
液压 Hydraulic pressure(Mpa)	20
液压油流量 hydraulic oil flux (L/min.)	31
油箱 Oil Tank (L)	100
输送带 Conveyor (mm)	1200*600
整机尺寸 Overall Size (cm)	160*250*130
净重 Net Weight (kg)	550
应用 Application	Stone guilotine,for splitting long stone strips into rustic finish wall stone, cubic stone bricks,gravity feeding, automatic,splitting within few seconds, high efficiency,low energy consumption.

手动马赛克机
Manual stone mosaic splitting machine


MS-02M


MS-02


MS-02S







型号 Model	MS-02M	MS-02	MS-02S
劈裂力 Splitting force (tons)	2	2	2
最大劈石宽度 Max.splitting width (mm)	120	240	240
最大劈石高度 Max.splitting height (mm)	30	50	50
整机尺寸 Overall Size (cm)	63*43*60	50*40*70	70*50*150
净重 Net Weight (kg)	55	85	125
应用 Application	Chop various sizes flat face stones (thickness≤30mm) into:tessera, cubes& all the shapes desired.	Chop various sizes flat face stones (thickness≤50mm) into:tessera, cubes& all the shapes desired.	Chop various sizes flat face stones (thickness ≤50mm) into:tessera, cubes& all the shapes desired.

电动马赛克机
Motorized stone mosaic splitting machine


MS-02E


MS-2AE


MS50S







型号 Model	MS-02E	MS-2AE	MS50S
劈裂力 Splitting force (tons)	1	1	1
最大劈石宽度 Max.splitting width (mm)	240	120	vibrating screen:60*40*40
最大劈石高度 Max.splitting height (mm)	50	30	Manual:120*60*50
电机功率 Power Supply	motorized ,3kw	motorized ,1kw	Motorized,4kw
整机尺寸 Overall Size (cm)	40*40*90	65*120*110	120*50*30
净重 Net Weight (kg)	90	200	450
应用 Application	Chop various sizes flat face stones (thickness ≤20mm) into:tessera,cubes & all the shapes desired,automatic.	split rectangle stone (≤120*30*50mm) into two pieces in the length direction, automatic.	split rectangle stone (≤120*60*50mm) into two pieces in the length direction, automatic.continuous feeding,high speed.

液压马赛克机
Hydraulic stone mosaic splitting machine


MS-3H


MS-12F


MS-40F


MS-12H


MS-20H







型号 Model	MS-3H	MS-12F	MS-40F	MS-12H	MS-20H
劈裂力 Splitting force (tons)	3	12	40	12	20
最大劈石宽度 Max.splitting width (mm)	120	240	300	240	240
最大劈石高度 Max.splitting height (mm)	100	100	150	100	150
电机功率 Power Supply	Hydraulic,1kw	Hydraulic,3kw	Hydraulic,5.5kw	Hydraulic,3kw	Hydraulic,5kw
整机尺寸 Overall Size (cm)	90*60*140	50*60*160	70*80*170	90*50*130	110*50*140
净重 Net Weight (kg)	235	210	350	400	450
应用 Application	Chop various sizes flat face stones (≤L*120*50mm) into:tessera,cubes & all the shapes desired,pedal control	Chop various sizes flat face stones (≤L*240*100mm) into:tessera,cubes & all the shapes desired,pedal control	Chop various sizes flat face stones (≤L*300*150mm) into:tessera,cubes & all the shapes desired,pedal control	Chop various sizes flat face stones (≤L*240*100mm) into:tessera,cubes & all the shapes desired,pedal control	Chop various sizes flat face stones (≤L*240*150mm) into:tessera,cubes & all the shapes desired,pedal control

马赛克切割机(1)
Stone mosaic cutting machine(1)



BMD-150



BMP-300



LT-300

Machine Name	Single blade tiles cutting machine	Multi-blades tiles cutting machine	Mosaic piece shapping machine
Machine Model	BMD-150	BMP-300	LT-300
Spindle head	1	1	Max.processing size: 600*300*50mm,grinding head Max.Φ200mm .
Belt width	120mm	300mm	
Blade diameter	Φ400mm	Φ300-400mm	
spindle power	7.5KW	22KW	11KW
Belt motor power	0.75KW	1.5KW	/
lifting motor power	0.55KW	0.55KW	0.55KW
Max.processing width	/	20~300mm	/
Max cutting thickness	Max.cutting height 140mm	150mm	/
Total power	8.25KW	24.05KW	11.92KW
Size	1800*1300*1700	2200*1000*1650	1550*1250*1700
Weight	750kg	1200kg	1100kg
Belt speed	0.5M-2m/min.	1～6m/min.	working speed 0.3-3m/min.
Application	Cutting thin tiles,single blade,max cutting depth 150mm	Cutting thin tiles,max processing width 300mm,max.cutting depth 150mm	For shapping difference design of mosaic pieces

马赛克切割机(2)
Stone mosaic cutting machine(2)



BMQ-300 / BMQ-400



MB-600-1 / MB-800-1

Machine Name	Strip and particle mosaic cutting machine	Strip and particle mosaic cutting machine	600 type 1 head automatic cutting machine	800type 1 head automatic cutting machine
Machine Model	BMQ-300	BMQ-400	MB-600-1	MB-800-1
Spindle head	1	1	1	1
Belt width	320mm	420mm	620mm	820mm
Blade diameter	Φ150～300mm	Φ150～300mm	Φ150~300mm	Φ150~300mm
spindle power	18.5KW	18.5KW	15KW	15KW
Belt motor power	1.5KW	1.5KW	1.5KW	1.5KW
lifting motor power	0.55KW	0.55KW	0.55KW	0.55KW
Max.processing width	12~300mm	12~400mm	12~600mm	12~800mm
Max cutting thickness	50mm	50mm	50mm	50mm
Total power	20.55KW	20.55KW	17.05KW	17.05KW
Size	2100*1000*1650	2200*1000*1650	2200*1600*1800	2300*1800*1800
Weight	1100kg	1200kg	1300kg	1500kg
Belt speed	1～6m/min.	1～6m/min.	1~6m/min.	1~6m/min.
Application	cutting tiles into strip mosaic and Mosaic particles,max tile width 300mm,finish particle size min.10mmx10mm	cutting tiles into strip mosaic and Mosaic particles,max tile width 400mm,finish particle size min.10mmx10mm	cutting stone tiles,ceramic tiles into mosaic in different size. finish particle size min.10mmx10mm , and any shapes as strip tile, lozenge or hexagon etc.Max cut width 600mm	cutting stone tiles,ceramic tiles into mosaic in different size. finish particle size min.10mmx10mm , and any shapes as strip tile, lozenge or hexagon etc.Max cut width 800mm

马赛克切割机、定厚机

Stone mosaic cutting and calibrating machine





MB-600-2 / MB-800-2



BMD-150



BMD-400

Machine Name	600 type 2 head automatic cutting machine	800 type 2 head automatic cutting machine	Calibrating machine	Calibrating machine
Machine Model	MB-600-2	MB-800-2	BMD-150	BMD-400
Spindle head	2	2	4	4
Belt width	620mm	820mm	200mm	400mm
Blade diameter	Φ150~300mm	Φ150~300	grinding wheel Φ120～150mm	grinding wheel Φ350mm
spindle power	15KW*2	15KW*2	8KW	16.5KW
Belt motor power	1.5KW	1.5KW	1.5KW	1.5KW
lifting motor power	0.55KW	0.55KW	Mxa.calibrating thickness*width 5*150mm	Max.calibrating thickness*width 5*350mm
Max.processing width	12~600mm	12~800mm		
Max cutting thickness	50mm	50mm		
Total power	33.5KW	33.5KW	8.75KW	16.5KW
Size	2500*1600*1700	2500*1800*1700	2500*1700*1900	3300*1200*1950
Weight	1600kg		1000kg	1500kg
Belt speed	1~6m/min.	1~6m/min.	1~6m/min.	1~6m/min.
Application	cutting stone tiles,ceramic tiles into mosaic in different size. finish particle size min.10mmx10mm , and any shapes as strip tile, lozenge or hexagon etc.Max cut width 600mm,2 motor driven, high efficiency	cutting stone tiles,ceramic tiles into mosaic in different size. finish particle size min.10mmx10mm , and any shapes as strip tile, lozenge or hexagon etc.Max cut width 800mm,2 motor driven,high efficiency	Calibrating tiles,max tile width 120mm	Calibrating tiles,max tile width 400mm

马赛克抛光机

Polishing production line for tiles and stone mosaic



Machine Name	12 Head swing polish machine	14 Head swing polish machine	16 Head swing polish machine	20 Head swing polish machine
Machine Model	PL400-12	PL400-14	PL400-16	PL400-20
Polish head	12	14	16	20
Belt width	400mm	400mm	400mm	400mm
Polish head Dia	Φ125mm	Φ125mm	Φ125mm	Φ125mm
Belt motor power	3KW	3KW	3KW	3KW
Swing motor power	0.75KW	0.75KW	0.75KW	0.75KW
Polishing speed range	1～6m/min.	1～6mm/min.	1～6m/min.	1～6m/min.
Max polishing Dia	350mm	350mm	350mm	350mm
Total power	21.75KW	24.75KW	27.75KW	33.75KW
Size	3800*1800*1200	4000*1800*2000	4200*1800*2000	4800*1800*2000
Weight	1600kg	1800kg	3000kg	3200kg
Max polish thickness	50mm	50mm	50mm	50mm
Application	Polishing glass surface,particles stone mosaic and tiles,processing width max.400mm,more heads, higher efficiency			



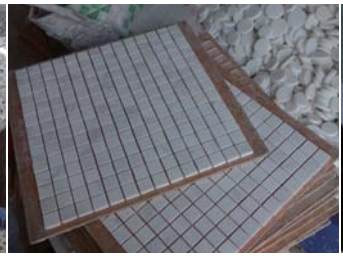



振动磨圆机
Vibratory Finishing Machine

振动抛光机适用于将大理石，花岗岩，石灰岩，马赛克和砂岩石块加工成仿古自然面。
它可分为回旋式振动机和直线式振动机。

This machine is used for marble, granite, limestone, mosaic stone and sandstone processing to antique and aged looking stone. It can be divided into rotary type and linear type.



三角形磨块
Triangle abrasive chips







Rotary type vibration machine
加工尺寸: 1*1厘米到40*40厘米
Pieces size: from 1*1cm to 40*40cm

Type	Rotary						Linear	
Model	BV-R200	BV-R400	BV-R600	BV-R800	BV-R1200	BV-R1500	BV-T1800	BV-T2800
Total motor power (kw)	3	5	5.5	5.5	11	11	2*5.5	2*9.0
R.P.M.	1400	1400	1400	1400	1400	1500	1400	1400
Net volume (L)	200	400	600	800	1200	1500	1200	1800
Dimension LxWxH(mm)	1200*1200*915	1410*1410*1040	1820*1820*1140	1850*1850*1220	1930*1930*1350	2120*2120*1420	3500*1336*1256	3300*1830*1740
Weight (kg)	420	850	1100	1200	2200	2400	2800	4000
Max processing size	30*30	30*30	30*30	30*30	40*40	40*40	60*60cm	90*60cm









Linear type vibration Machine
加工尺寸: 30*30厘米到90*60厘米
Pieces size: from 30*30cm to 90*60cm

鄂式破碎机Jaw crusher ДРОБИЛКИ

Jaw crusher is one of the most popular crushing equipment. It is especially suitable for laboratories that need to crush small-sized wastes, and are at any rate capable of crushing the hardest materials, such as granite and porphyry.

Дробилка является одним из самых популярных дробильное оборудование.особено подходит для обработки отходов небольших размеров,и также может обработывать очень прочные материалы, такие как гранит, габбро идр.

Type	Feed opening (mm)	Max feeding size(mm)	Adjusting range of discharge opening(mm)	capacity (t/h)	Rotation speed of electric shaft(r/min.)	Motor power (kw)	Total weight (t)	Dimensions (LxWxH) (mm)
PE-150x250	150x250	125	10-40	1-3	250	5.5	0.60	720x660x850
PE-200x300	200x300	180	15-50	2-6	260	7.5	0.79	910x750x990
PE-200x350	200x350	180	18-70	3-10	260	11	1.00	1000x870x990
PE-250x400	250x400	210	20-60	5-20	300	15	2.20	1300x1090x1270
PE-400x600	400x600	340	40-100	16-60	275	30	6.20	1730x1730x1630
PE-500x700	500x700	425	50-100	40-110	275	55	10.50	1980x2080x1870
PE-600x750	600x750	500	150-200	80-240	275	55	11.00	2070x2000x1920
PE-600x900II	600x900	500	65-160	50-180	250	55-75	15.50	2190x2206x2300
PE-750x1060	750x1060	630	80-140	110-320	250	90-110	24.50	2660x2430x2800
PE-800x1060	800x1060	640	130-190	130-330	250	110	25.00	2710x2430x2800
PE-830x1060	830x1060	650	160-220	150-336	250	110	25.50	2740x2420x2940
PE-870x1060	870x1060	660	200-260	190-336	250	110	26.00	2810x2430x2800
PE-900x1060	900x1060	685	230-290	230-390	250	110	27.00	2870x2420x2940
PE-900x1200	900x1200	750	95-165	220-450	200	110	43.00	3380x2870x3330
PE-1000x1200	1000x1200	850	195-265	315-500	200	110	45.50	3480x2876x3330
PE-1200x1500	1200x1500	1020	150-300	400-800	180	160	98.00	4200x3300x3500
PEX-150x750	150x750	120	18-48	8-25	320	15	3.10	1200x1530x1060
PEX-250x750	250x750	210	25-60	13-35	330	30	5.10	1380x1750x1540
PEX-250x1000	250x1000	210	25-60	16-52	330	30	6.80	1560x1950x1390
PEX-250x1200	250x1200	210	25-60	20-61	330	37	7.80	2140x1660x1500
PEX-300x1300	300x1300	250	20-90	16-105	300	55	12.50	2720x1950x1600





反击式破碎机
Impact Crusher

本系列产品能处理边长100–500毫米冯下物料，其抗压强度最高可达350兆帕，具有破碎比大，破碎后物料呈立方体颗粒等优点。

This series of products can process the material with side length of 100 to 500mm. The compression strength can reach 350MPA.The advantages of the products are big reduction ratio and cubic shape of the crushed materials



Model 型号	Specification 规格	Feed Opening(mm) 进料口尺寸	Max. Feeding Size(mm) 最大进料边长	Capacity 生产能力	Power 功率	Total Weight 总重量	Overall Dimensions (L×W×H) 外形尺寸 （长×宽×高）
	(mm)			(t/h)	(kw)	(t)	(mm)
PF-1007	Φ1000×700	400×730	300	30-70	45	12	2330×1660×2300
PF-1010	Φ1000×1050	400×1080	350	50-90	55	15	2370×1700×2390
PF-1210	Φ1250×1050	400×1080	350	70-130	110	17.7	2680×2160×2800
PF-1214	Φ1250×1400	400×1430	350	100-180	132	22.4	2650×2460×2800
PF-1315	Φ1320×1500	860×1520	500	130-250	220	27	3180×2720×2620
PF-1520	Φ1500×2000	830×2040	700	300-550	440	50.6	3959×3564×3330

注：该系列反击式破碎机适用于硬岩破碎，其典型产品花岗岩出料粒度≤40mm占90%。
Note:This series of impact crushers are suitable for hard rock crushing;90% of the dischargig size of granite(typical product) is less than 40mm.

锤式破碎机
Hammer Crusher

电动机带动转子在破碎腔内高速旋转。物料自上部给料口给入机内，受高速运动的锤子的打击、冲击、剪切、研磨作用而粉碎。在转子下部，设有筛板、粉碎物料中小于筛孔尺寸的粒级 通过筛板排出，大于筛孔尺寸的粗粒级 阻留在筛板上继续受到锤子的打击和研磨， 最后通过筛板排出机外。

The electric motor runs slowly with the impellor after decelerated by the belt, decelerator and gears wheel. The sand and stone flow into washing launder from feeding launder, rolls with the impellor, and grinds each other. The impurity covering the sand is washing away. At the same time, add more water, the strong water flow will take away waste and some low–weight wastes from washing launder.



型号规格 Specification	Feeding Size 给料粒度	Discharging Size 出料粒度	Capacity 生产能力	Motor Power 电机功率 （kw）	Total Weight 总重量(t)	Overall Dimensions 外形尺寸
	(mm)	(mm)	(m^3/h)			(长×宽×高)(mm)
PCΦ400×300	≤200	≤25	5-10	11	0.8	900×670×860
PCΦ600×400	≤250	≤30	10-22	22	2.26	1200×1050×1200
PCΦ800×600	≤250	≤35	18-40	55	4.8	1310×1180×1310
PCΦ1000×800	≤350	≤35	25-50	75	5.9	1600×1390×1575
PCΦ1000×1000	≤350	≤35	30-55	90	8	1800×1590×1775
PCΦ1250×1250	≤350	≤35	35-65	132	14	2060×1600×1890
PCΦ1400×1400	≤350	≤35	50-100	280	32	2365×1870×2220
PCΦ1600×1600	≤350	≤35	100-150	480	37.5	3050×2850×2800

圆锥破碎机
Cone Crusher



本系列破碎机，适用于破碎中等以上硬度的各种矿石和岩石，具有结构可靠，生产效率高，调整方便，使用经济等特点。其弹簧保险系统是过载保护装置，可使异物铁块通过破碎腔而不危害机器，采用干油或水两种密封形式，使石粉与润滑隔离，保证可靠工作。破碎腔型式由矿石用途决定，标准型适用于中碎；中型适用于细碎；短头型适用于细碎。

This series of crusher is used for crushing of ores and rocks,the advantages are:reliable structure,high efficiency,easy–to–adjust and economical.The safety spring system is the overload protection device, which makes foreign material goes through the machine without bring any hurt to it. The sealing modes are oil and water,which segregate the stone powder nad lubricating system. The crushing chamber is decided by the purpose of ore, the standard model is suitable for medium crushing; the medium model is suitable for fine crushing and the short head model is suitable for fine crushing.

型号 Type		破碎锥直径 Diameter of crush-ing cone(mm)	最大给料尺寸 Max. feeding size(mm)	排料口宽度 Width of discharge opening(mm)	处理能力 Processing capacity(t/h)	电动机功率 Motor power (kw)	主轴摆动次数 Swing frequ-ency of main shaft(r/min)	总重量 Total Weight(t)	外形尺寸 （长×宽×高） Dimensions (L*W*H) (mm)
PYB	600	600	65	12-25	40	30	356	5	2234×1370×1675
PYD			35	3-13	12-23			5.5	2234×1370×1675
PYB	900	900	115	15-50	50-90	55	333	11.2	2692×1640×2350
PYZ			60	5-20	20-65			11.2	2692×1640×2350
PYD			50	3-13	15-50			11.3	2692×1640×2350
PYB	1200	1200	145	20-50	110-168	110	300	24.7	2790×1878×2844
PYZ			100	8-25	42-135			25	2790×1878×2844
PYD			50	3-15	18-105			25.3	2790×1878×2844
PYB	1750	1750	215	25-50	280-480	160	245	50.3	3910×2894×3809
PYZ			185	10-30	115-320			50.3	3910×2894×3809
PYD			85	5-13	75-230			50.2	3910×2894×3809
PYB	2200	2200	300	30-60	59-1000	280-260	220	80	4622×3302×4470
PYZ			230	10-30	200-580			80	4622×3302×4470
PYD			100	5-15	120-340			81.4	4622×3302×4470

YK系列振动筛
YK series vibrating screen



本系列振动筛做圆形运动，是为采石场筛分料石设计的，也可供选煤矿、选矿、建材、电力及化工部门等作产品分级用，丫X系列为国内新型机种，该机采用偏心激振器及轮胎联轴器，具有结构先进，激振力强，振动噪音小，易于维修，坚固耐用等特点。

注：本公司可根据不同用户的实际情况，可定制各种规格、各种振动方式的振动筛。

The YK series of vibrating screen moves on a circular motion. It is a multi–layer and high efficient vibrating screen.

Advantages :

Stable structure, strong exciting force, high efficiency, low noise pollution, easy to maintain and durability.

Circular vibrating screen has been widely used in mine, construction, transportation, energy and chemical industries.

Type	Sieve layer	Sieve area (m2)	Mesh size (mm)	Max. Feeding size (mm)	Capacity (t)	Vibrating frequency (r/min)	Double amplitude (mm)	Power (kw)	Sieve obliquity (o)	Sieve specification (mm)	Weight (kg)
2YK1225	2	6	4-50	400	8-60	800-970	8	5.5	20	1200*2500	3500
3YK1225	3	9	4-50	400	10-70	800-970	8	5.5	20	1200*2500	3850
2YK1230	2	7.2	4-50	400	12-78	800-970	8	7.5	20	1200*3000	4200
3YK1230	3	10.8	4-50	400	13-80	800-970	8	7.5	20	1200*3700	4600
2YK1237	2	8.88	5-50	400	15-68	800-970	8	7.5	20	1200*3700	4600
3YK1237	3	13.22	5-50	400	16-90	800-970	8	7.5	20	1500*3500	5200
2YK1535	2	10.5	5-50	400	20-125	800-970	8	11	20	1500*3500	5890
3YK1535	3	15.75	5-50	400	21-125	800-970	8	11	20	1500*3500	6700
2YK1545	2	13.5	5-50	400	22-150	800-970	8	15	20	1500*4500	6330
3YK1545	3	20.25	5-50	400	22-150	800-970	8	15	20	1500*4500	6800
4YK1545	4	27	5-50	400	22-155	800-970	8	18.5	20	1500*4500	7800
2YK1548	2	14.4	5-50	400	22.5-162	800-970	8	15	20	1500*4800	6980
3YK1548	3	21.6	5-50	400	22.5-162	800-970	11	15	20	1500*4800	7700
4YK1548	4	28.8	5-50	400	22.5-162	800-970	8	18.5	20	1500*4800	8700
2YK1848	2	17.28	5-80	400	25-206	750	8	15	20	1800*4800	9080
3YK1848	3	25.92	5-80	400	32-276	750	8	18.5	20	1800*4800	9600
4YK1848	4	34.54	5-80	400	32-285	750	8	22	20	1800*4800	11100
2YK1854	2	19.44	5-80	400	32-312	800-970	8	18.5	20	1800*5400	10150
3YK1854	3	29.16	5-80	400	32-312	800-970	8	22	20	1800*5400	10840
4YK1854	4	38.88	5-80	400	32-336	800-970	8	30	20	1800*5400	12840
2YK2160	2	25.2	50-100	400	50-475	970	8	30	20	2100*2600	11780
3YK2160	3	37.8	50-100	400	50-475	970	8	30	20	2100*2600	12800
4YK2160	4	50.4	50-100	400	50-497	970	8	37	20	2100*2600	14800
2YK2460	2	28.8	50-100	400	65-550	970	8	37	20	2400*6000	15600
3YK2460	3	43.2	50-100	400	70-620	970	8	37	20	2400*6000	17600
4YK2460	4	57.6	50-100	400	80-680	970	8	45	20	2400*6000	19600

技术参数变动恕不另行通知

Technical parameters are subject to change without notice.